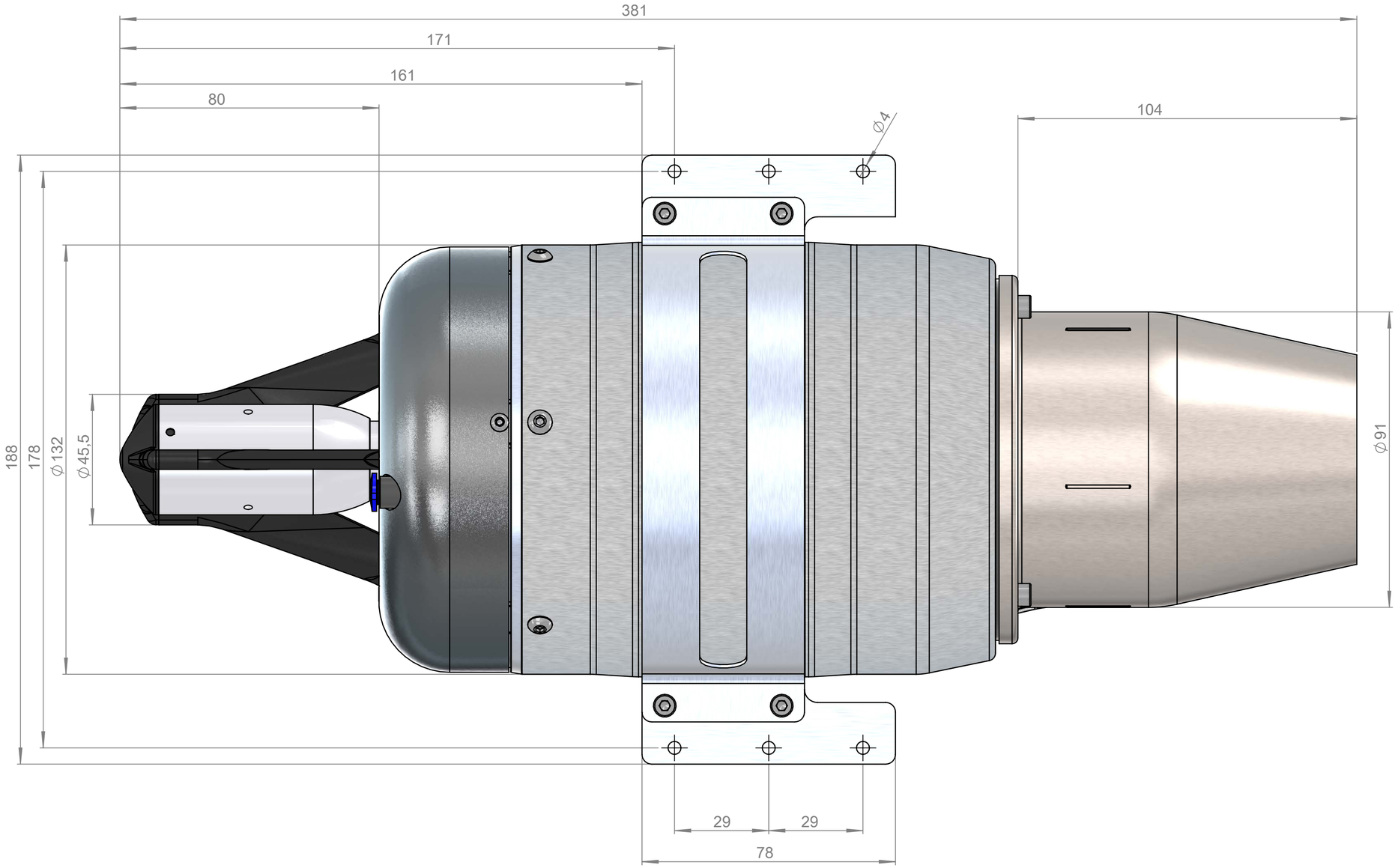

© 2017 Dimensions: P300-PRO-GL