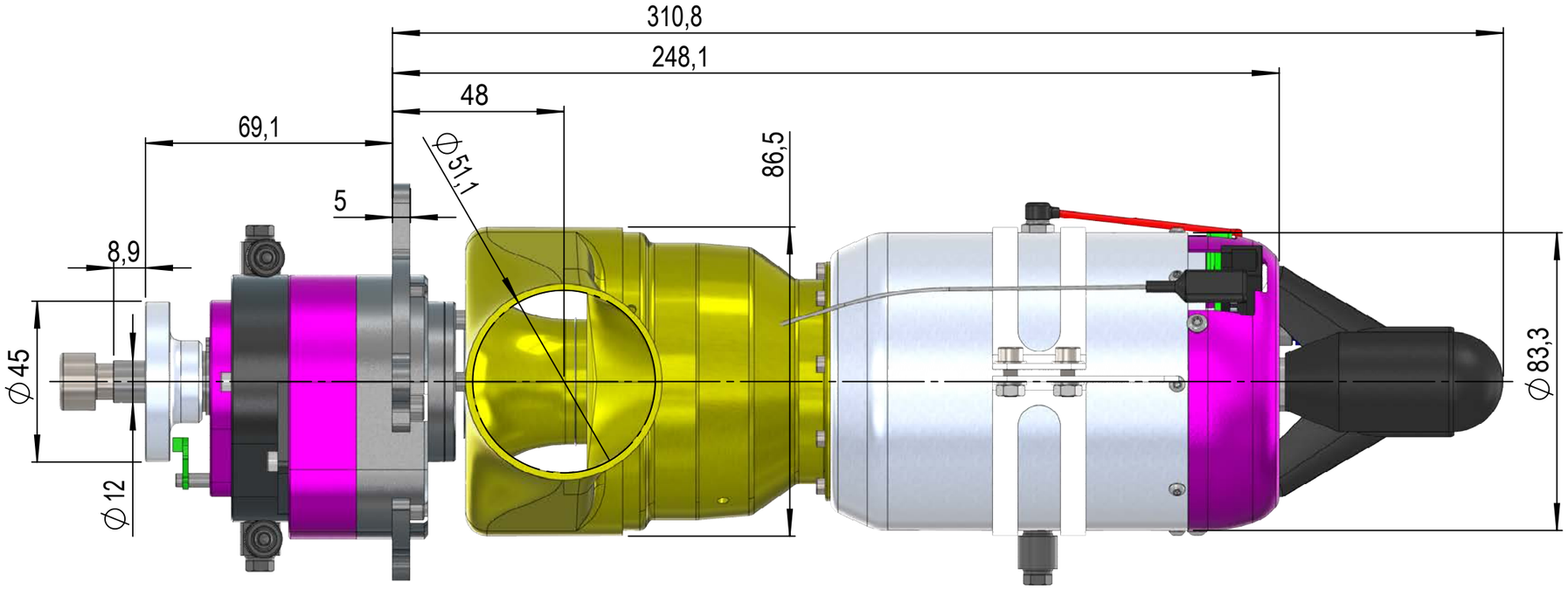

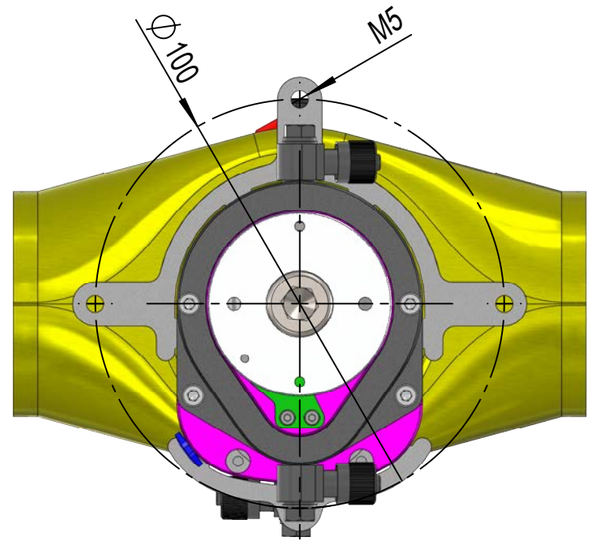

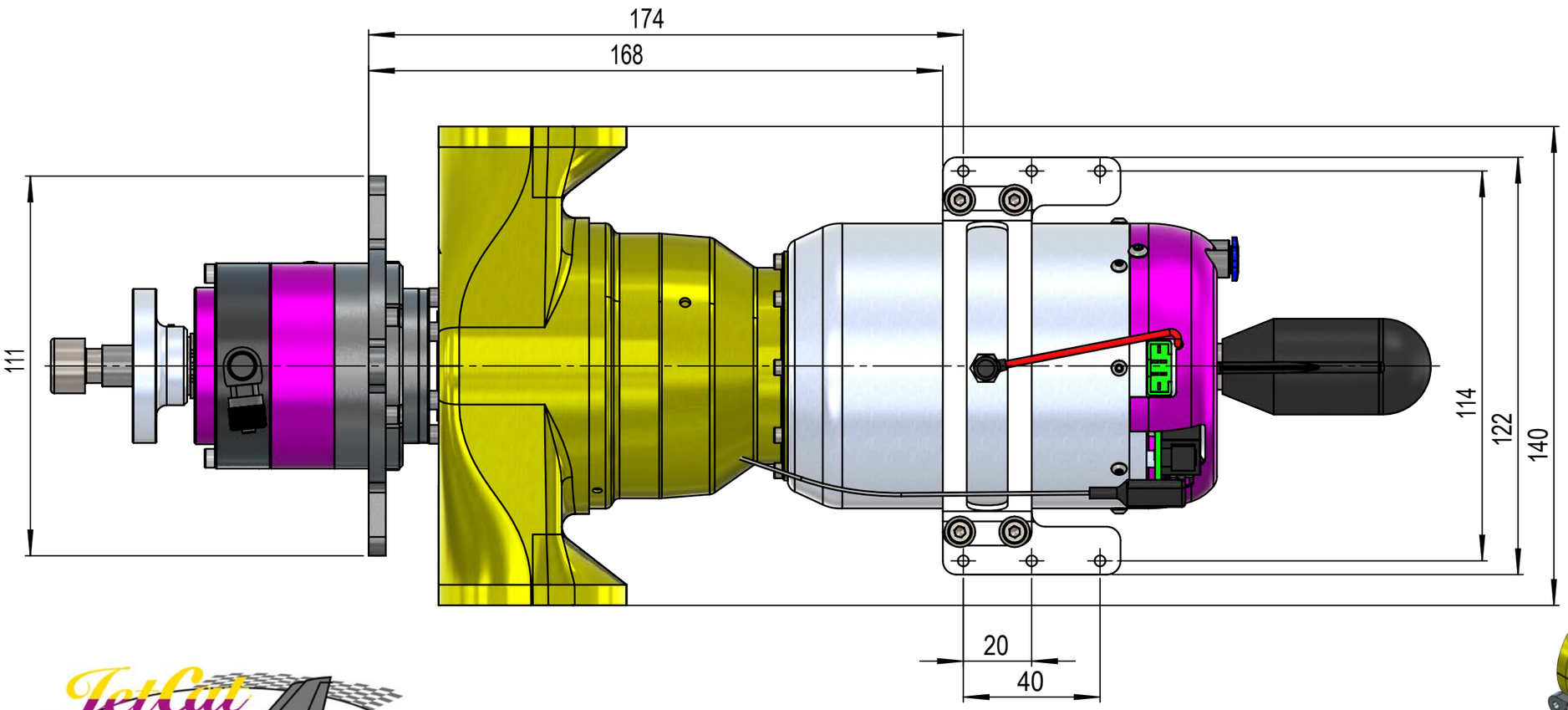

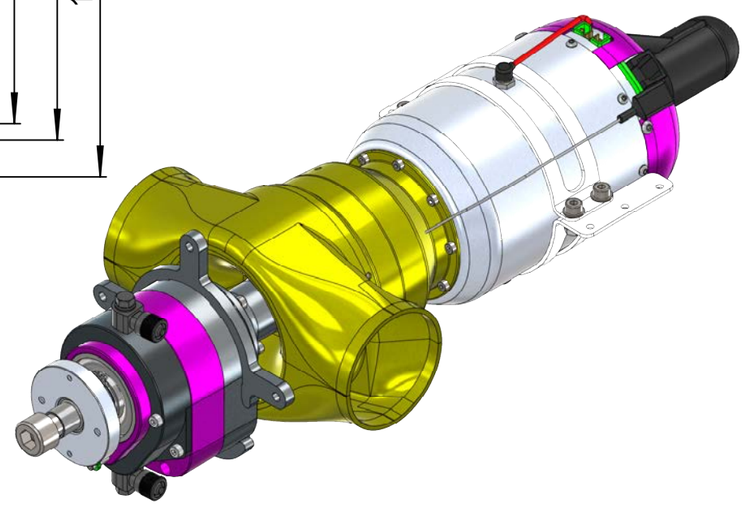

© 2017 Dimensions: SPT5-H