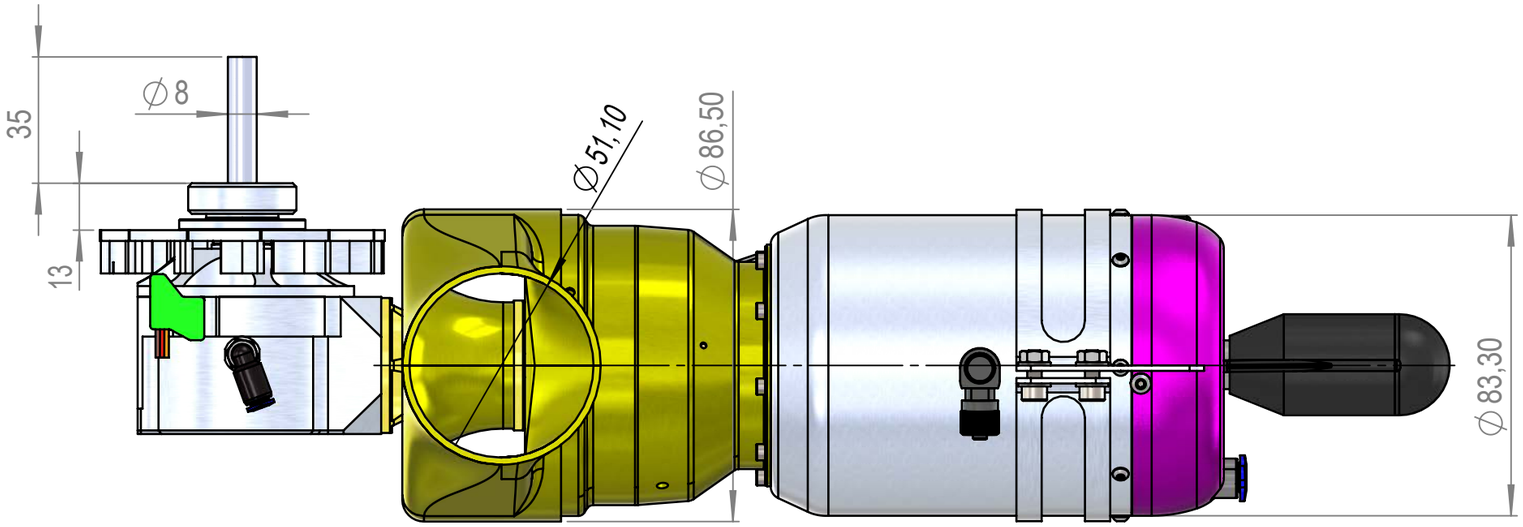
35
∅8
13
∅51,10
∅86,50
∅83,30

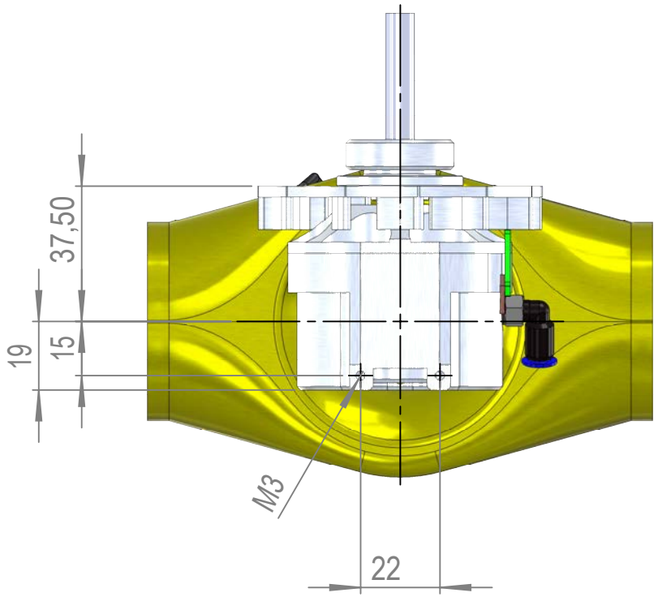
37,50
19
15
M3
22

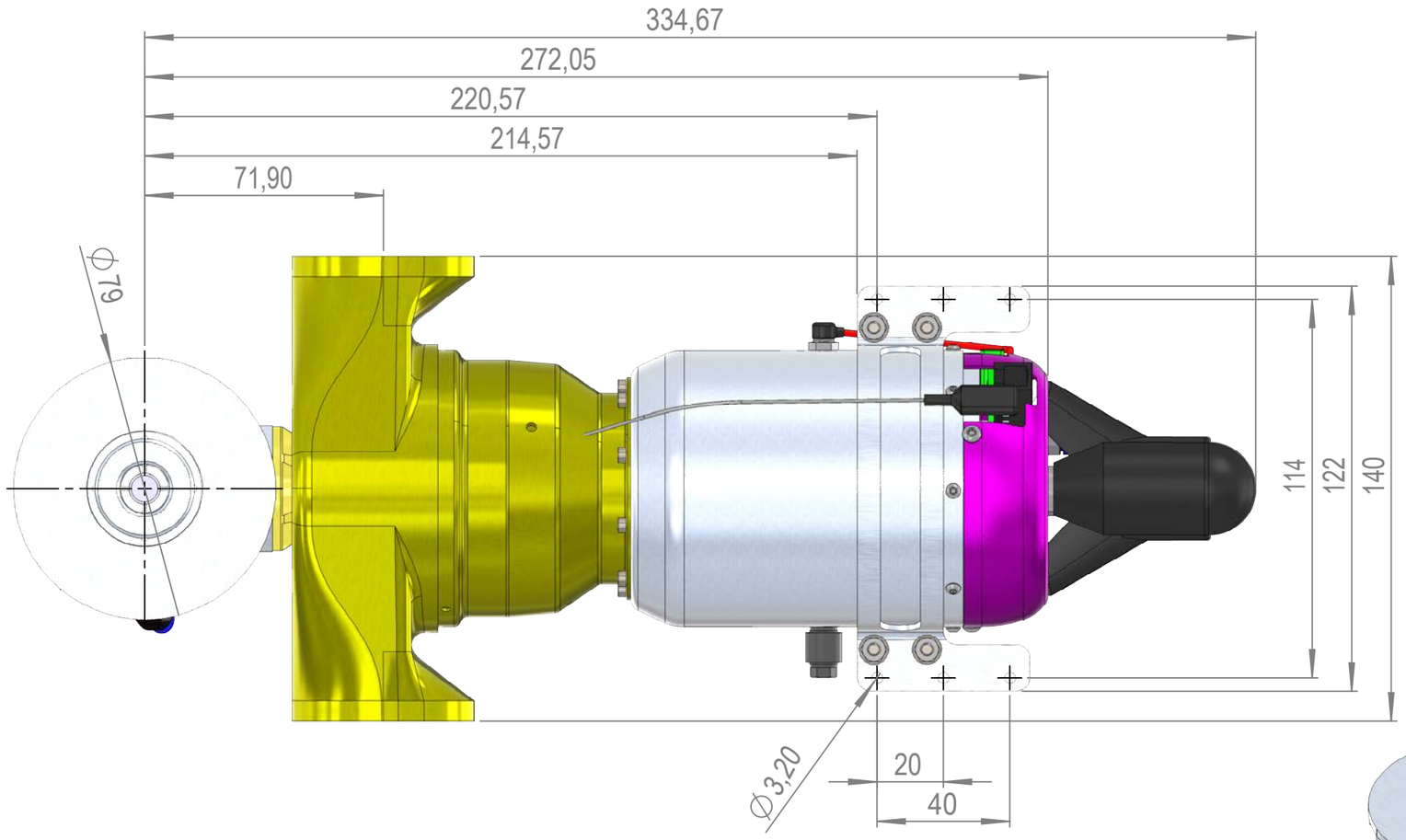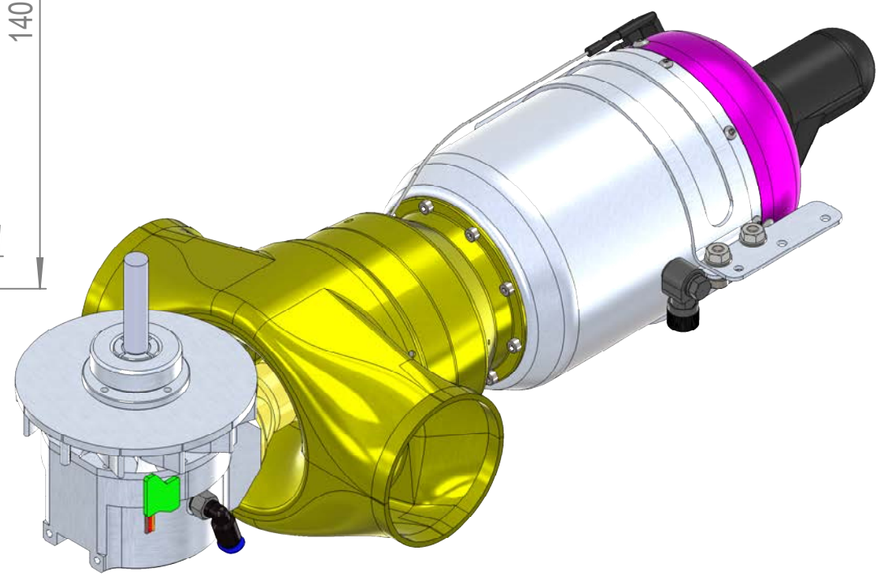
334,67
272,05
220,57
214,57
71,90
∅79
114
122
140
∅3,20
20
40